PLATINUM SAFES

Superior Drug Storage

The Platinum Drug Safe is specifically designed to secure prescription drugs for hospitals, pharmacies, aged care, veterinary and medical clinics. It has an auto latching mechanism which ensures the door will automatically lock as soon as it is closed and it can be upgraded with an audit trail digital locking system to provide access reports. This safe complies with the Australian Health Department Specifications.

Recommended Cash Rating $ 20,000

Australian Health Department Approved

Aus-made Digital & Key Locks

Warranty. 5 yr on safe construction 2 yr on locks

PLATINUM SAFES

THE DRUG SAFE

PREMIUM DRUG PROTECTION

Features

- Complies with the Drugs, Poisons and Controlled Substances Regulations Act 2008
- Recommended Cash Rating $20,000 (unsupported)
- Auto latching mechanism on all models and auto locking with a digital code lock offering superior protection
- **Available with Access Control to provide full audit trail reports**
- Heavy duty construction with a 12 mm steel plate door and body to the Australia Health and Pharmaceutical specifications
- Relocking device to act against attack
- 3 ways locking mechanism
- 4 mount holes in the base and 4 mount holes in the back
- Recessed door with hinged strap
- Adjustable shelving for optimum storage
- Locking mechanisms available; Key Combination, Digital & Access Control
- Digital upgrade features available include; time delay, dual user and audit trail
- All models available in left hand hinging
- Resilient powder coated finish in grey
- 5 years warranty on safe and 2 year on locks

Locking Devices

Ross Access Control

Digital

Key

Combination

Digital Upgrades

Specifications

Model	External			Internal			Adjust. Shelves	Weight (kgs)
	Height	Width	Depth	Height	Width	Depth		
PS1	350	350	200	325	320	120	1	60
PS2	450	350	200	425	320	120	2	75
PS3	600	450	200	575	420	120	3	105
PS4	750	450	250	725	420	170	4	140
PS5	900	450	300	875	420	220	5	175
PS6	1050	600	350	1025	570	270	6	250
PS7	1200	750	400	1175	720	320	7	350
PS8	1700	850	550	1650	800	475	8	600

PLATINUM SAFES

WWW.PLATINUMSAFES.COM.AU

Distributed by:

AUS SAFES
QUALITY GUARANTEED

1800 15 16 15

WWW.AUSSAFES.COM.AU

PLATINUM SAFES

THE DRUG SAFE
PREMIUM DRUG PROTECTION

Mounting Specifications

SIZE 1

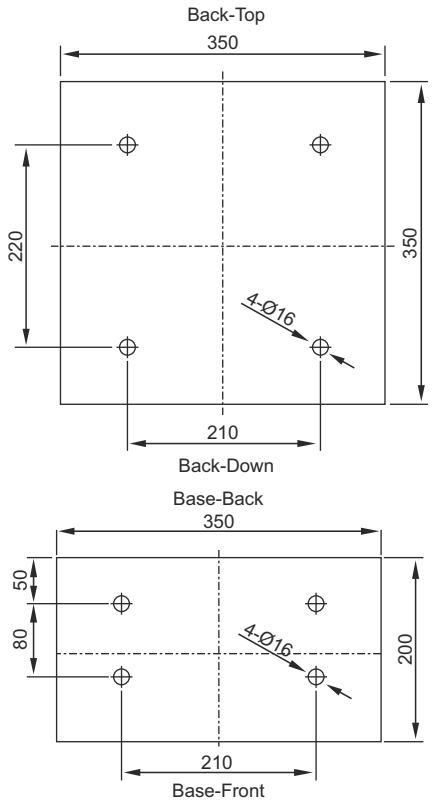

SIZE 2

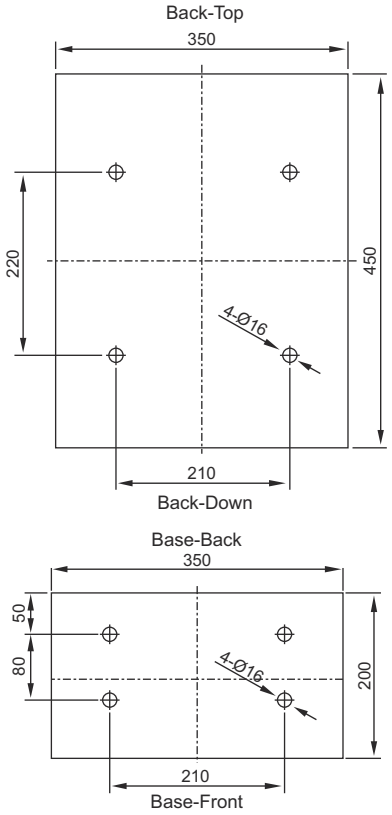

SIZE 3

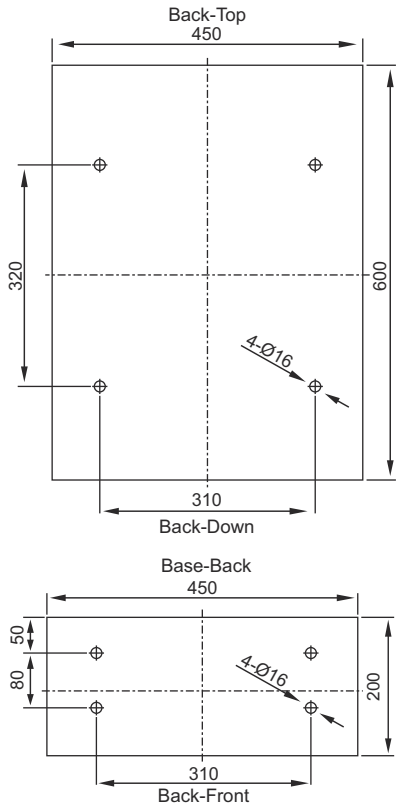

SIZE 4

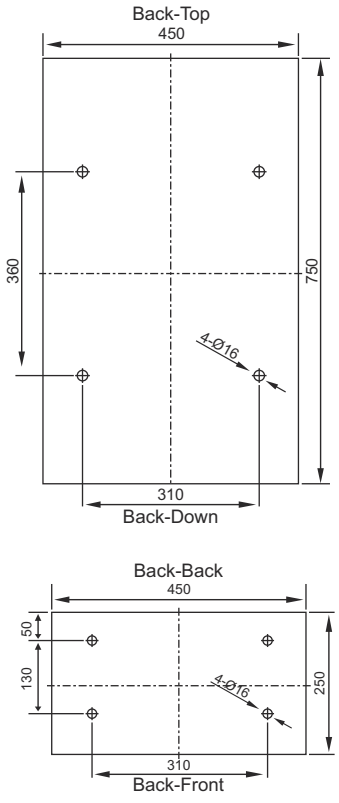

PLATINUM SAFES

THE DRUG SAFE
PREMIUM DRUG PROTECTION

Mounting Specifications

SIZE 5

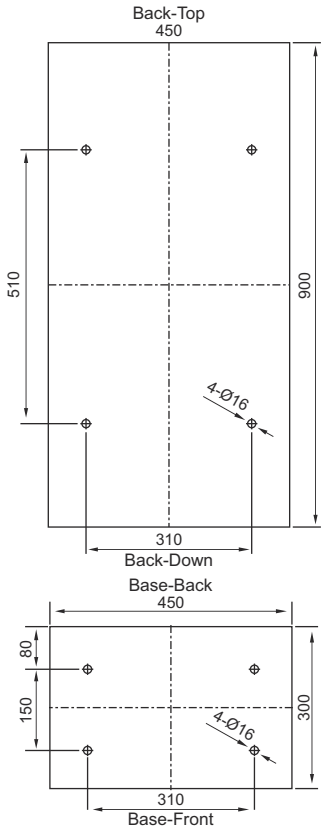

SIZE 6

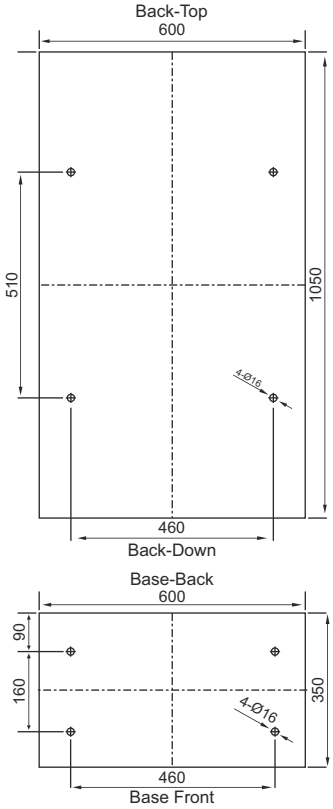

SIZE 7

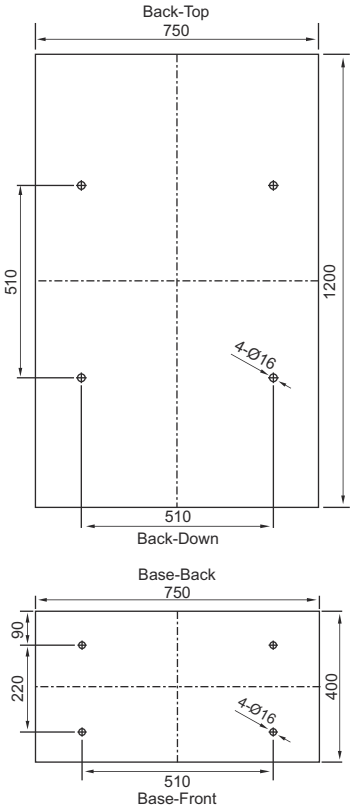
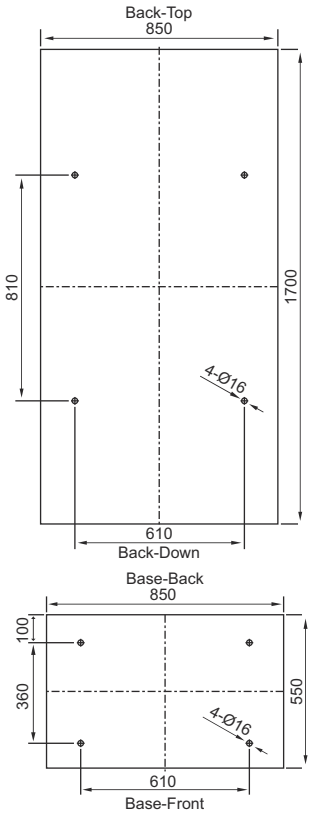
SIZE 8